PENTA Gruppo Kkt.
4031 Debrecen, Tőzsér u. 8.
Tel.: 52/535-504, Fax: 52/535-503
www.pentagruppo.hu, pentagruppo@gmail.com

PLATFORM ATEX ACCESSORIES

Accessories

Code	Description
TB60EX	Low cart (atex Ex II 2GD IIB version) for a movable scale with 400x400 and 400x500 platforms. Height from ground to platform top: 250 mm
TB60IEX	Stainless steel low cart (atex Ex II 2GD IIB version) for 400x400 and 400x500 platforms. Height from ground to platform surface: 260 mm
TB60BEX	Low cart (atex Ex II 2GD IIB version) for 500x 500 platforms. Height from ground to platform surface: 260 mm
TB60BIEX	Stainless steel low cart (atex Ex II 2GD IIB version) for 500x 500 platforms. Height from ground to platform surface: 260 mm
TB300EX	Low cart (atex Ex II 2GD IIB version) for a movable scale with 500x600 and 600x600 platforms. Height from ground to platform top: 270 mm
TB300IEX	Stainless steel low cart (atex Ex II 2GD IIB version) for 500x600 and 600x600 platforms. Height from ground to platform surface: 270 mm
TA60EX	High cart (atex Ex II 2GD IIB version) for a movable scale with 400x400 and 400x500 platforms. Height from ground to platform top: 650 mm
TA60IEX	Stainless steel high cart (atex Ex II 2GD IIB version) for 400x400 and 400x500 platforms. Height from ground to platform surface: 650 mm
TA300EX	High cart (atex Ex II 2GD IIB version) for a movable scale for 500x600 and 600x600 platforms. Height from ground to platform top: 650 mm
TA300IEX	STAINLESS STEEL high cart (atex Ex II 2GD IIB version) for 500x600 and 600x600 platforms. Height from ground to platform surface: 650 mm.

	A	B	C	D	E	F	G	H	L	M
TA60	880	1100	915	360	160	645	530	650	183	562
TA300	1030	1100	915	360	160	795	530	650	183	660

dimensions in mm

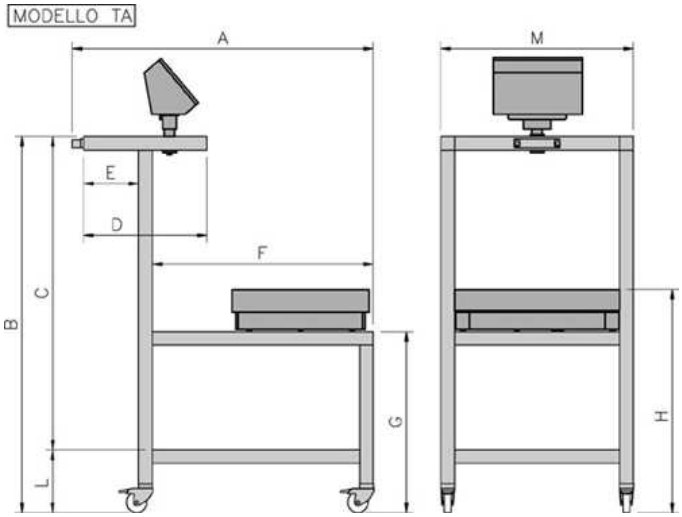

	A	B	C	D	E	F	G	H	L	M
TB60	910	880	730	330	220	770	610	270	150	425
TB60B	910	880	730	330	220	770	610	270	150	565
TB300	990	880	730	330	220	842	690	270	150	670
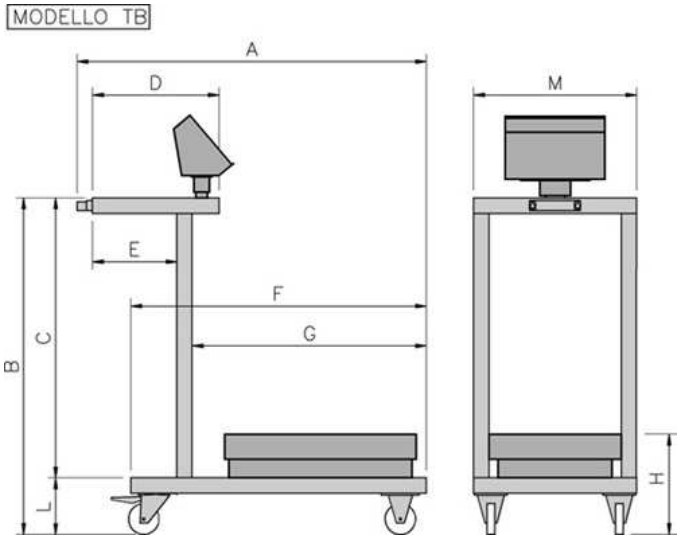
dimensions in mm